MERCRUISER (350 MAG. ALPHA EFI(GEN+) GM 350 V-8 1996)
Serial Nbr Range: 0F800300 THRU 0K001508 ()

THROTTLE LINKAGE

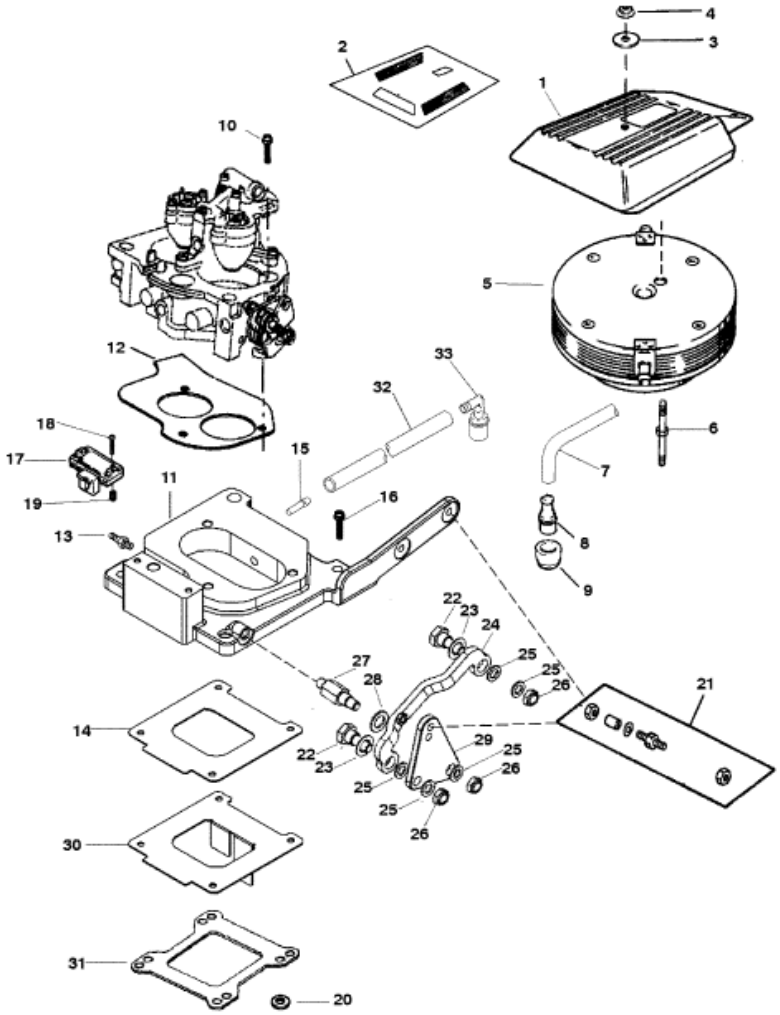

Parts List

Ref	Class	Part	Description	Qty	Comment	Footnote
1		18484A 3	COVER	1		
2	37	812776A36	DECAL SET	1	(350 MAGNUM ALPHA)	
2	37	812776A35	DECAL SET	1	(5.7LX BRAVO)	
3	12	86400	WASHER	1		
4	11	35045	NUT	1		
5		806637T	FLAME ARRESTOR	1		
6	16	806703	STUD	1		
7	32	15894 18	HOSE	1		
8		97850	ELBOW (90_)	1		
9	25	52188	GROMMET	2		
10	10	805390	SCREW	3		
11		807761A 1	ADAPTOR ASSEMBLY	1		
12	27	806640	GASKET	1		3
13	22	805691	FITTING	1		
14	27	807766	GASKET	1		3
15	22	807942	FITTING	1		
16	10	807717	SCREW	4		
17		805217A 1	MAP SENSOR	1		
18	10	807120	SCREW	2		
19	26	805412	SEAL	1		
20	22	48358	PLUG	1		
21	16	97477A 3	STUD KIT	2		
22	10	806946	BOLT	2		
23	12	91964	WASHER	2		
24		807097T	CONNECTOR	1		
25	12	20084	WASHER	5		
26	11	45592	NUT	3		
27		806915	SHAFT	1		
28	12	79552	WASHER	1		
29		806916T	PLATE	1		
30		807765A 1	PLATE ASSEMBLY	1		
31	27	41610	GASKET	1		3
32	32	806174 35	HOSE	1		
33	21	806603	PCV VALVE	1		
-	27	75611A96	GASKET SET-OVERHAUL	1		